MODEL : 030-000031
DIMENSION : 1800W × 750D × 750mmH
DESCRIPTION : WRITING TABLE

ASSEMBLY INSTRUCTION

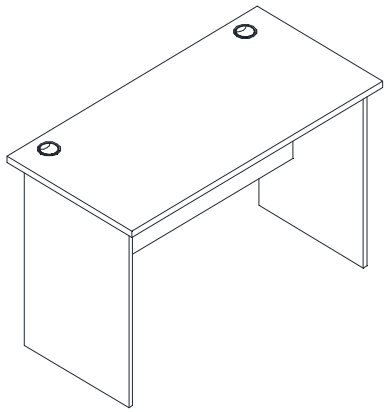

A	B	C	D	E	F	G	H	I	J	K
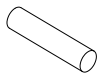	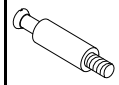									
8 PCS	10 PCS	10 PCS	2 PCS	4 PCS	PCS	PCS	PCS	PCS	PCS	PCS

	BOARD NAME	DIMENSION
①	**Table top**	1800 × 750 × 25 =1PC
②	**Table leg**	715 × 600 × 18 =2PCS
③	**Middle panel**	1704 × 450 × 16 =1PC

STEP1

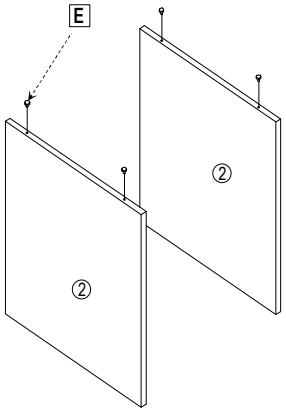

STEP2

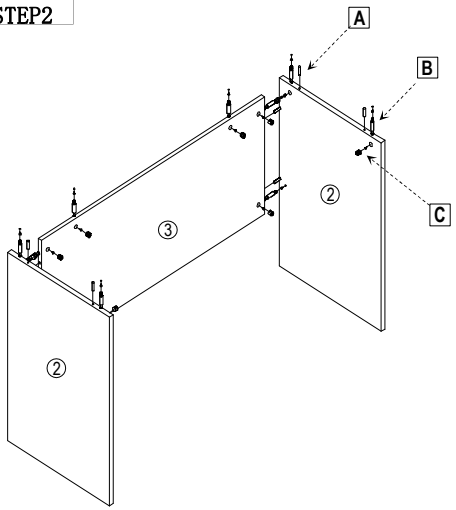

STEP3

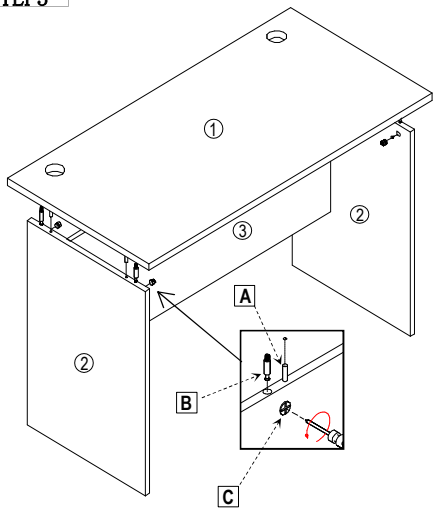

STEP4

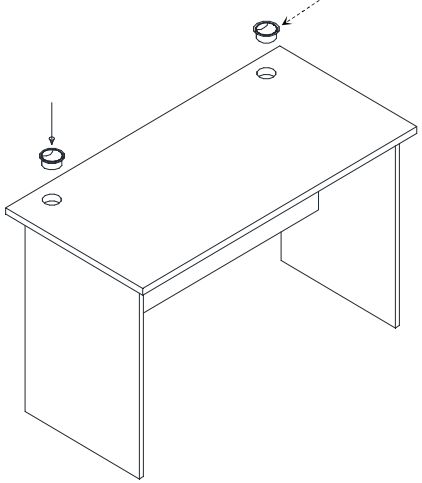

STEP5

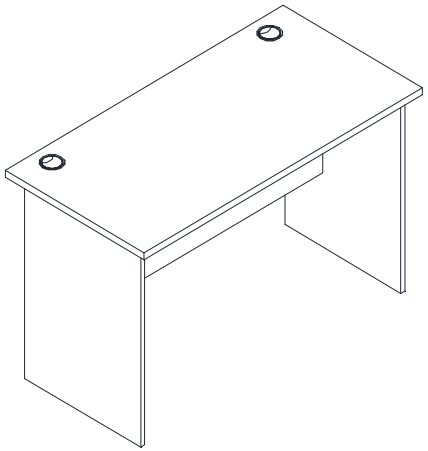

STEP6